THE 555 TIMER CIRCUIT

SEQUENTIAL LOGIC

prepared by:

Gyro A. Madrona

Electronics Engineer

GRADING SYSTEM

FINAL GRADE

30%

PRELIM

30%

MIDTERM

40%

ENDTERM

TERM GRADE

50%

WEEKLY

50%

EXAM

100%

LABORATORY

PENALTY

0

ABSENT

3

45-min LATE

5 max

15-min LATE

TOPIC OUTLINE

Operation of 555 Timer

- Schematic Diagram
- Frequency of Oscillation
- Period
- Duty Cycle

Prelim Project

OPERATION OF 555 TIMER

A device that has no stable states (**astable** multivibrator); it changes back and forth (**oscillates**) between two unstable states **without** any **external triggering**

The resulting output is typically a **square wave**

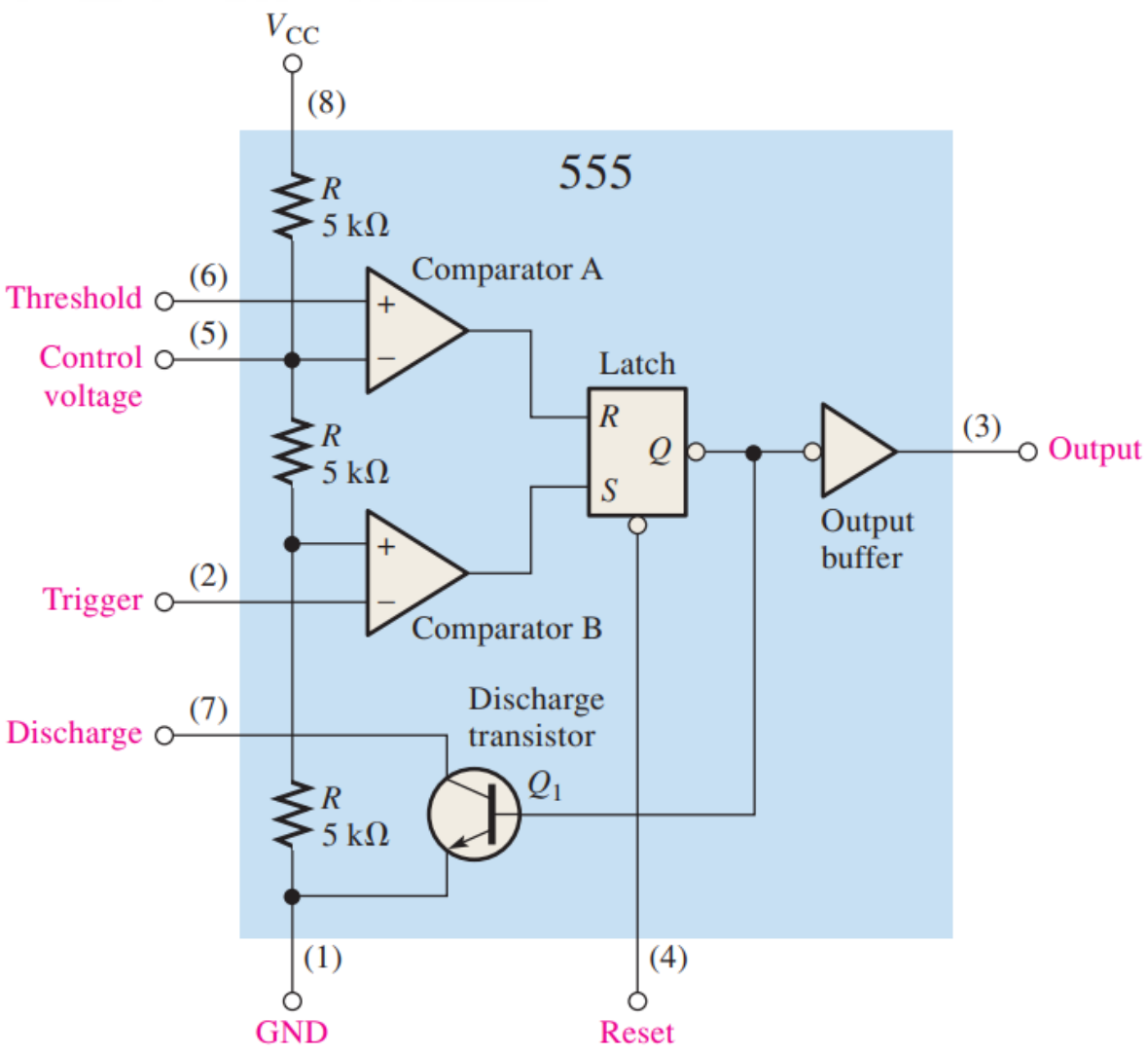

SCHEMATIC DIAGRAM

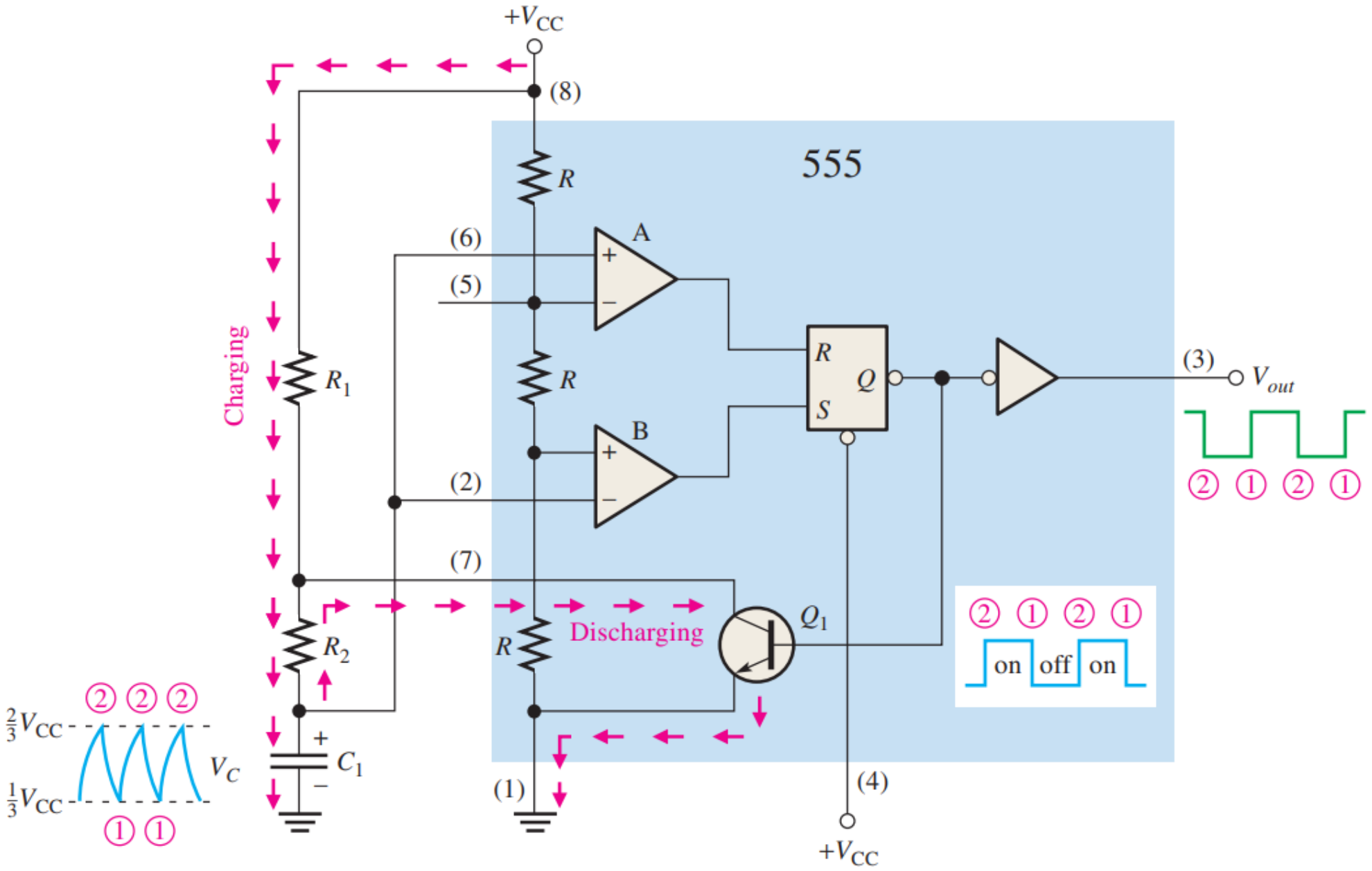

FREQUENCY OF OSCILLATION

$$f = \frac{1.44}{(R_1 + 2R_2)C_1}$$

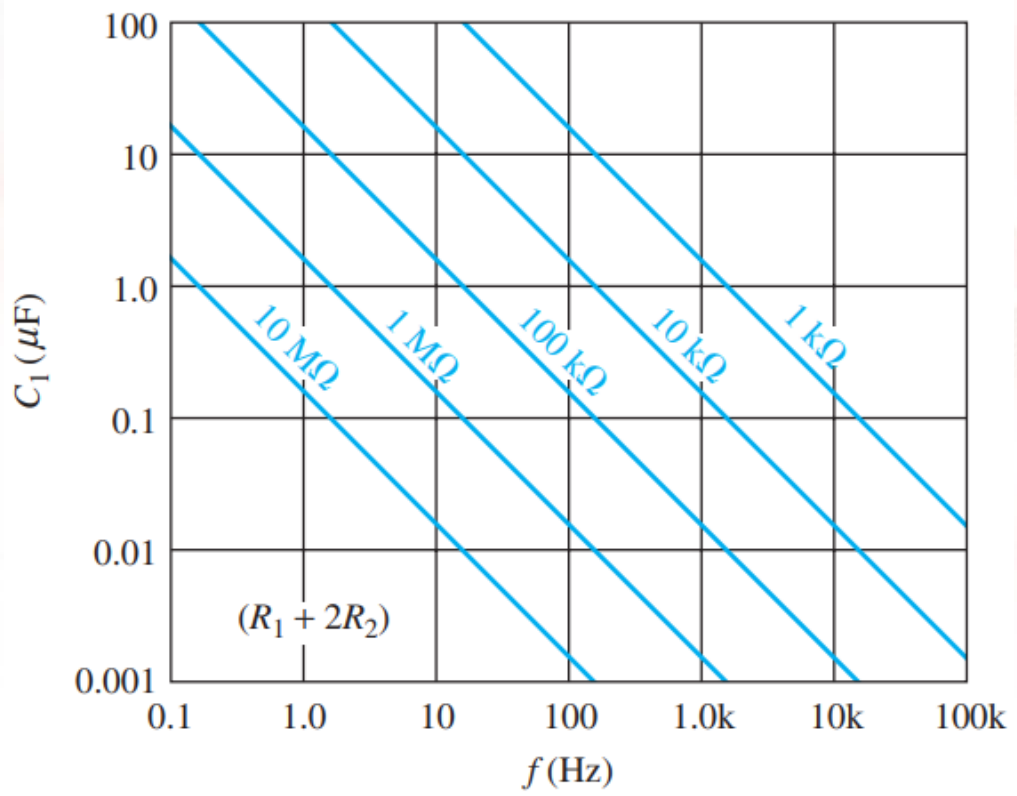

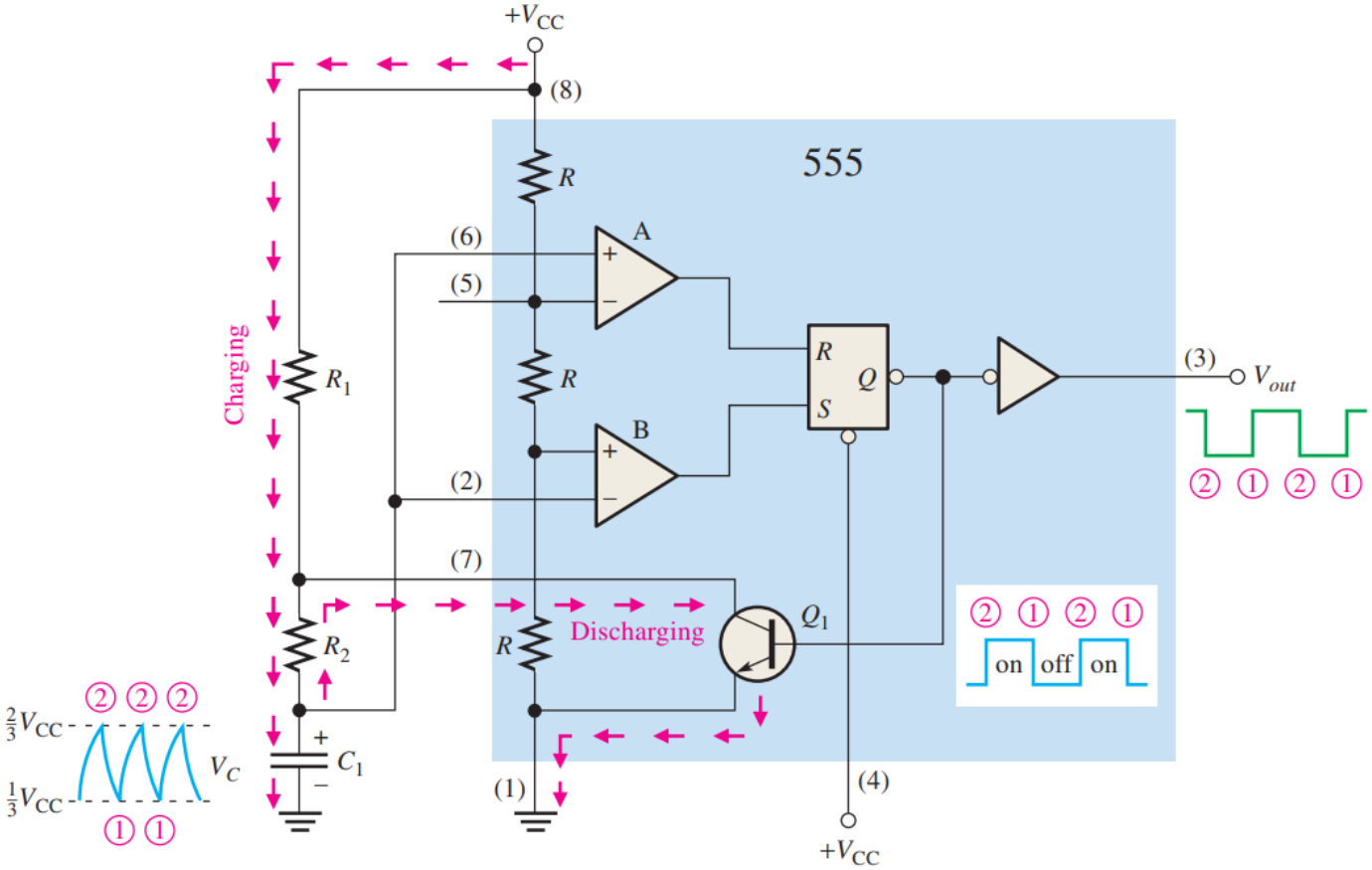

OUTPUT IS HIGH PULSE WIDTH

C_1 charge from $\frac{1}{3}V_{CC}$ to $\frac{2}{3}V_{CC}$,

$$\mathbf{t_H = 0.7(R_1 + R_2)C_1}$$

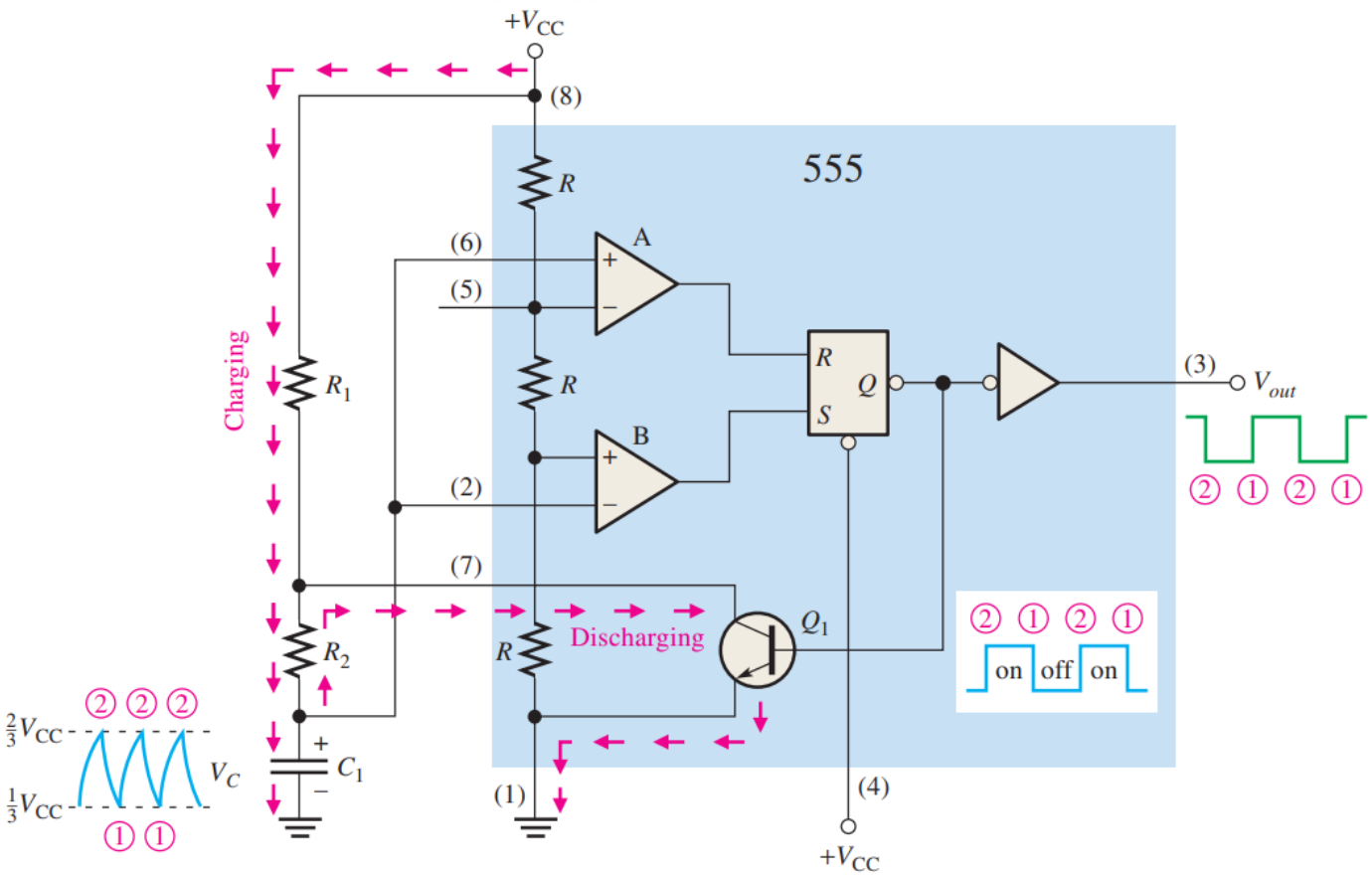

OUTPUT IS LOW PULSE WIDTH

C_1 discharge from $\frac{2}{3}V_{CC}$ to $\frac{1}{3}V_{CC}$,

$$\mathbf{t_L = 0.7R_2C_1}$$

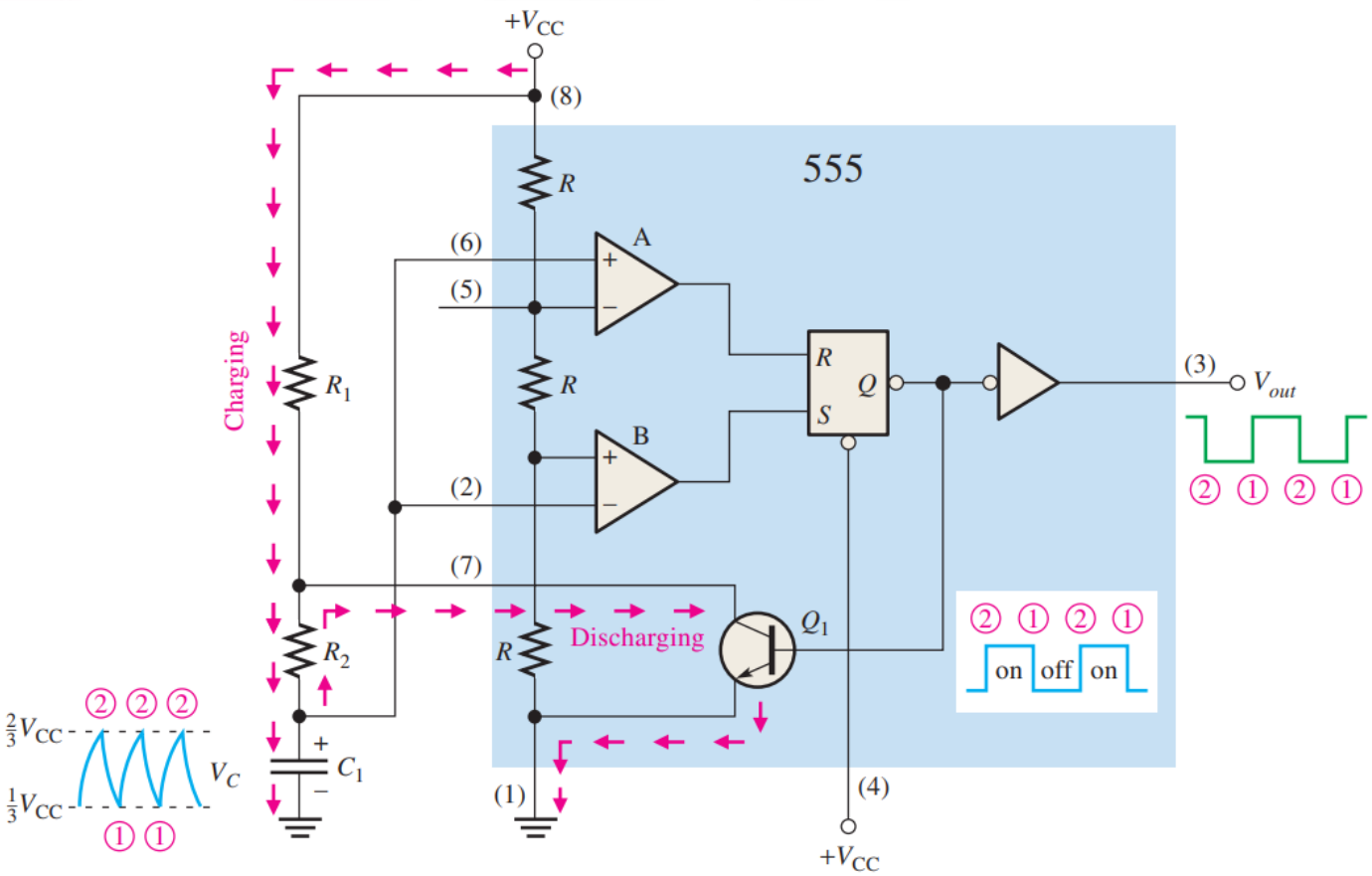

$$T = t_H + t_L$$

$$\mathbf{T = 0.7(R_1 + 2R_2)C_1}$$

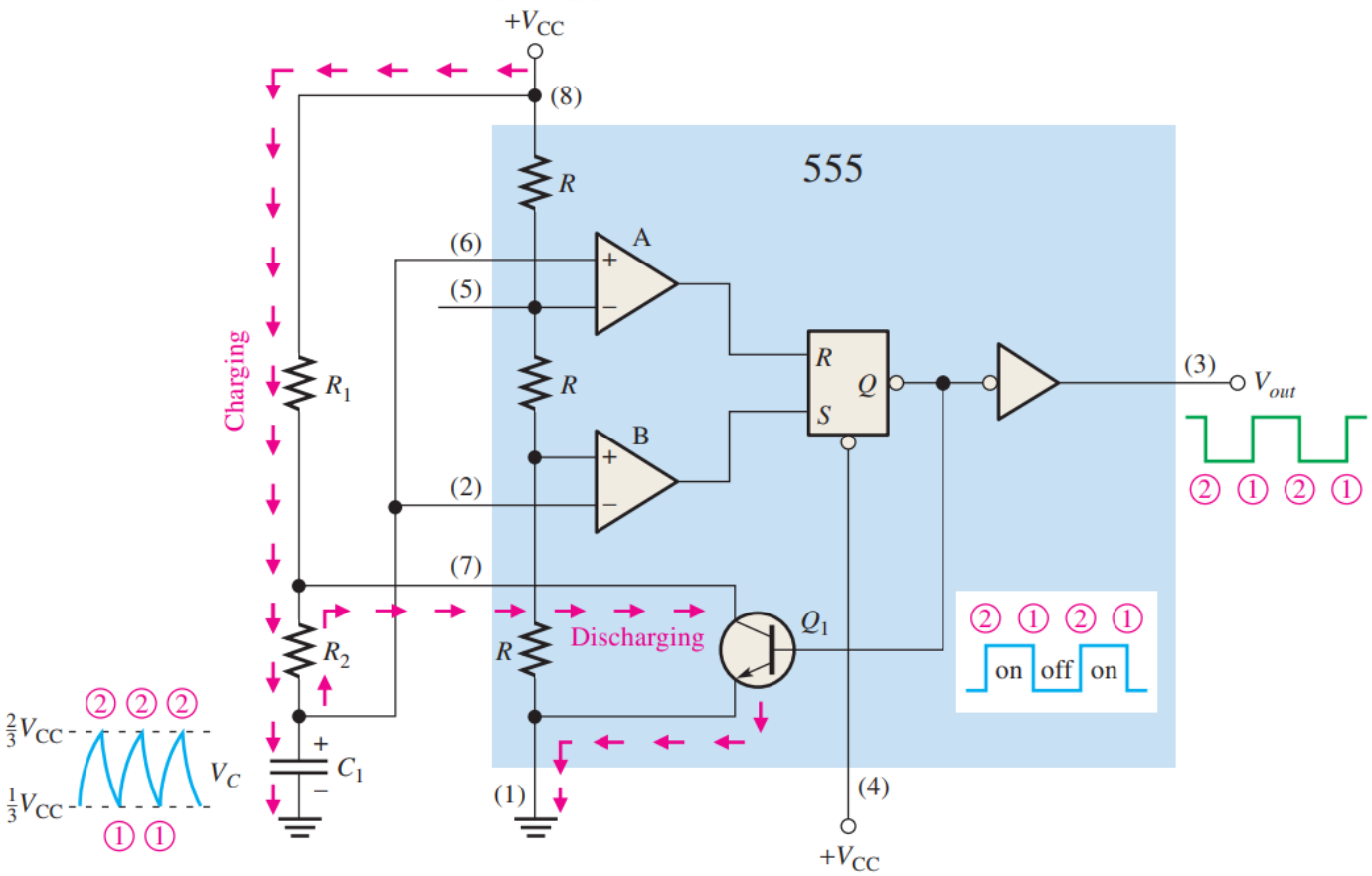

$$\text{Duty cycle} = \frac{t_H}{T}$$

$$\textbf{Duty Cycle} = \left[\frac{R_1 + R_2}{R_1 + 2R_2}\right] \times 100\%$$

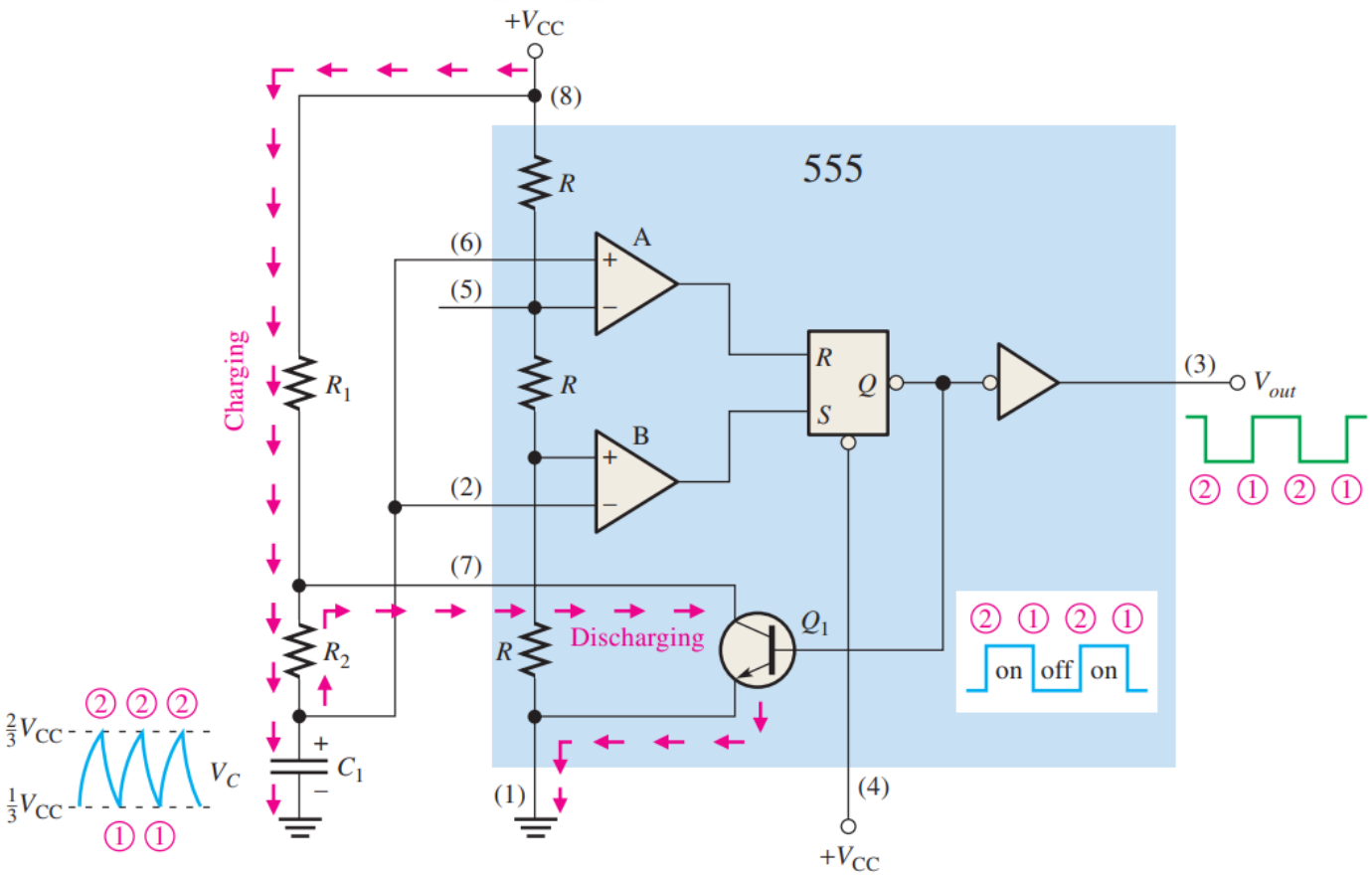

LABORATORY
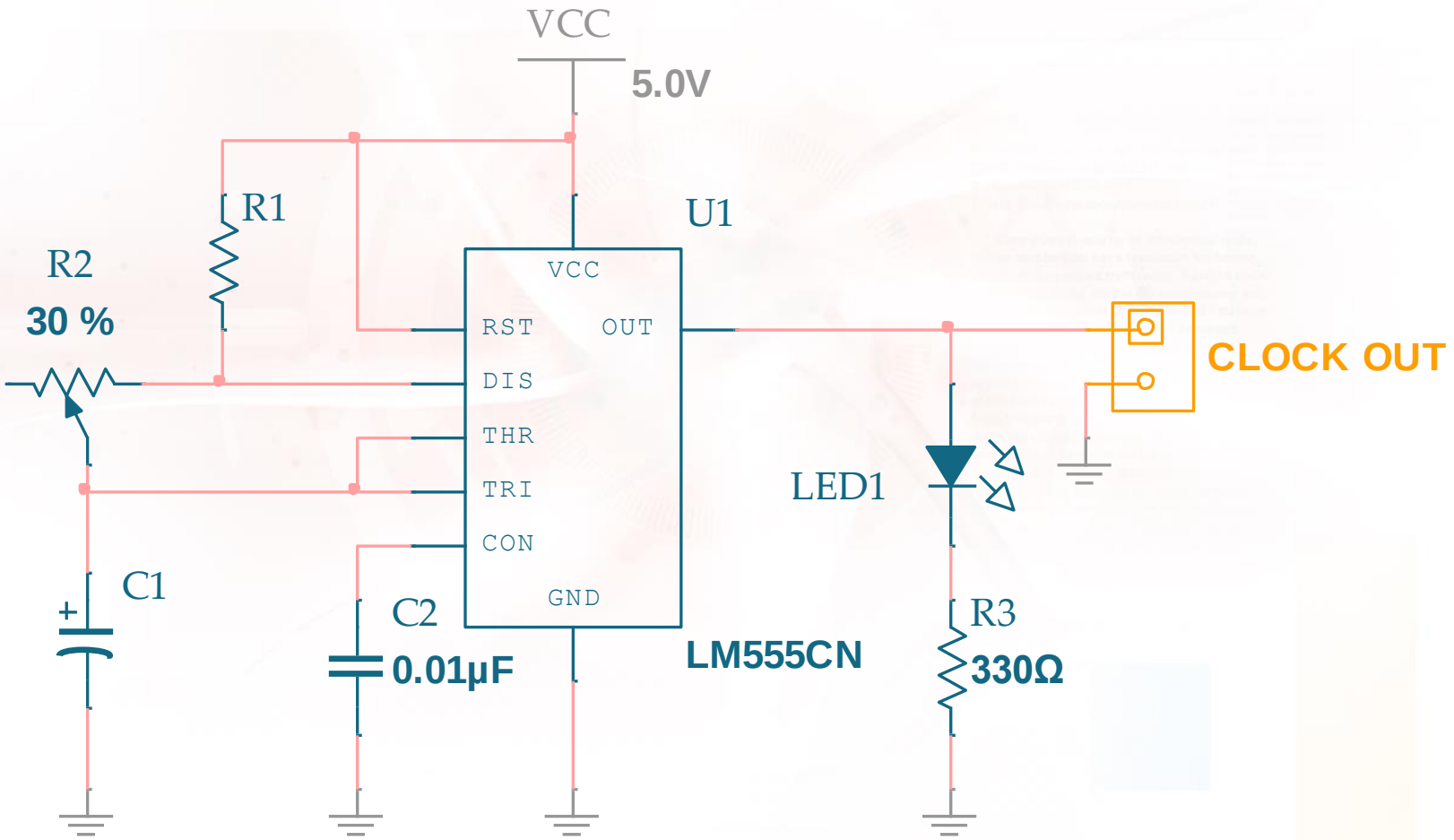
Design a **555 Timer** with an output frequency of **1Hz** and **50% duty cycle** pulse wave.